US 20110167700A1

(19) **United States**

(12) **Patent Application Publication**

(10) **Pub. No.: US 2011/0167700 A1**

(43) **Pub. Date: Jul. 14, 2011**

BOZICEVIC

(54) **LIGHT ACTIVATED CARTRIDGE AND GUN FOR FIRING SAME**

(76) Inventor: **KARL BOZICEVIC**, Redwood City, CA (US)

(21) Appl. No.: **12/757,791**

(22) Filed: **Apr. 9, 2010**

Related U.S. Application Data

(60) Provisional application No. 61/168,529, filed on Apr. 10, 2009, provisional application No. 61/168,900, filed on Apr. 13, 2009.

Publication Classification

(51) **Int. Cl.**

F41A 19/58	(2006.01)
F42B 5/02	(2006.01)
F41G 1/00	(2006.01)

(52) **U.S. Cl.** **42/84**; 102/430

(57) **ABSTRACT**

A light activated cartridge is disclosed. The cartridge is comprised of a metalcasing containing an explosive such as gun powder and holds a bullet at a first end. The second end of the casing includes a solid light transparent portion which may be a circular glass or polymeric component positioned in the casing where a primer is normally placed.

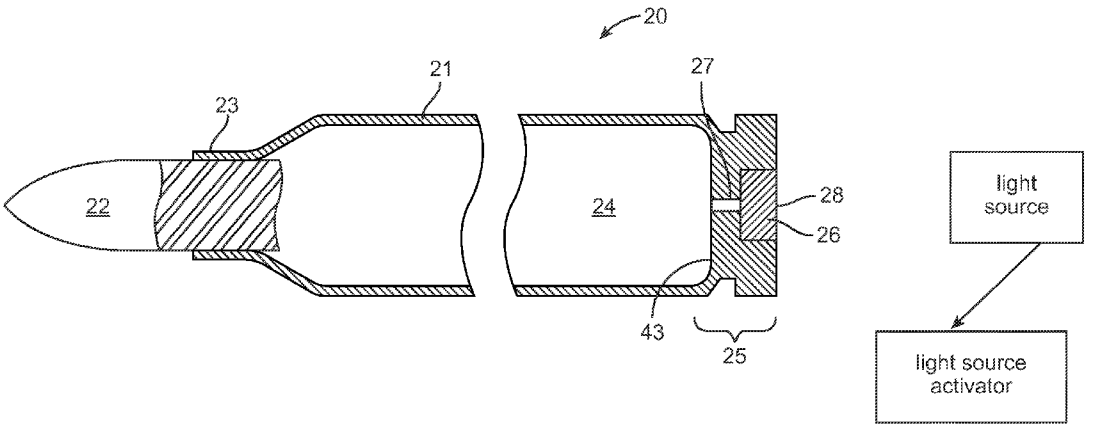

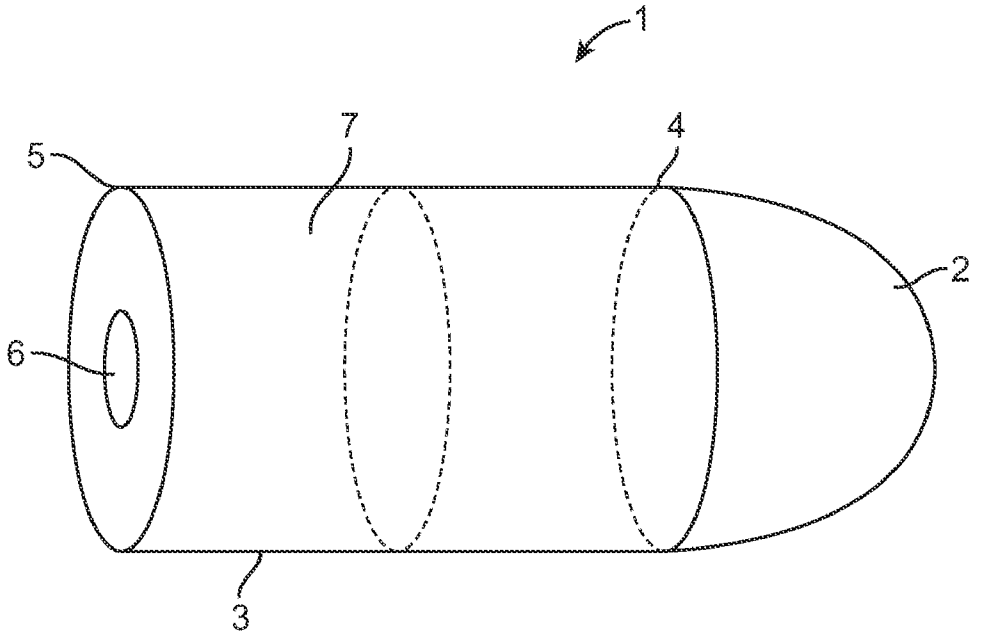

FIG. 1

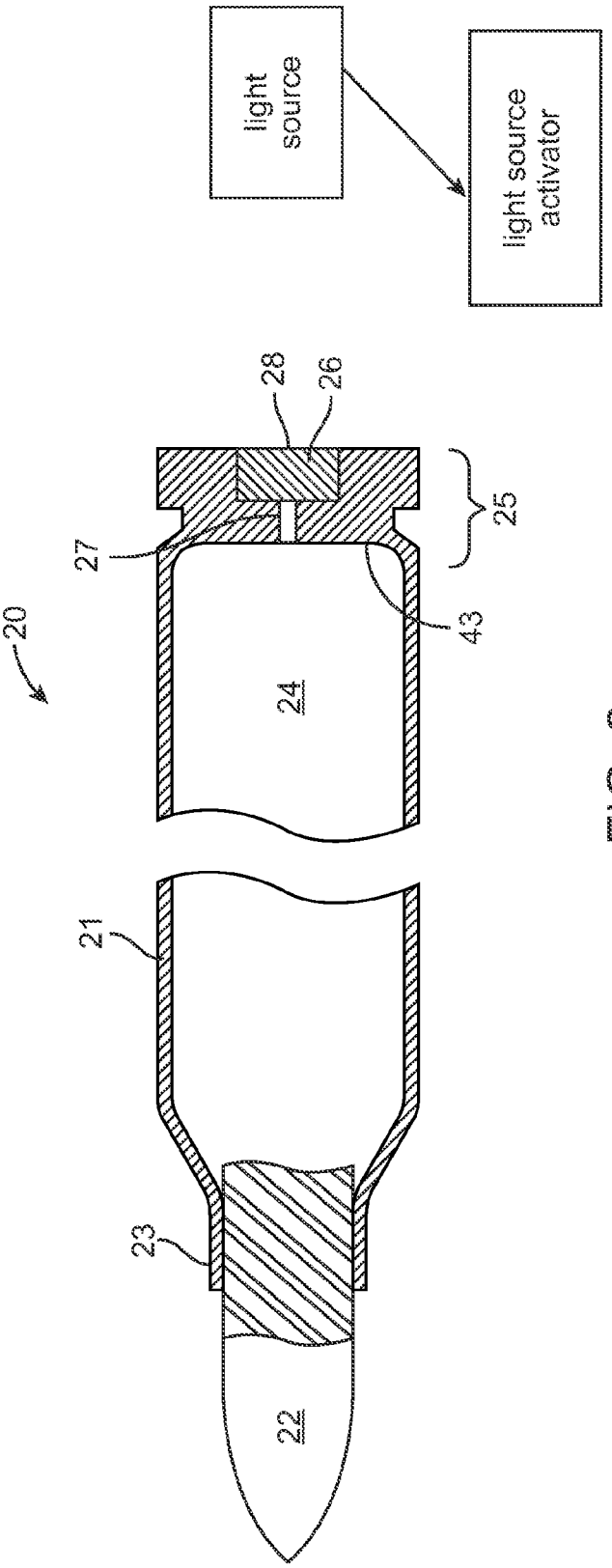
light source
light source activator
28
26
25
27
43
20
24
21
23
22

FIG. 2

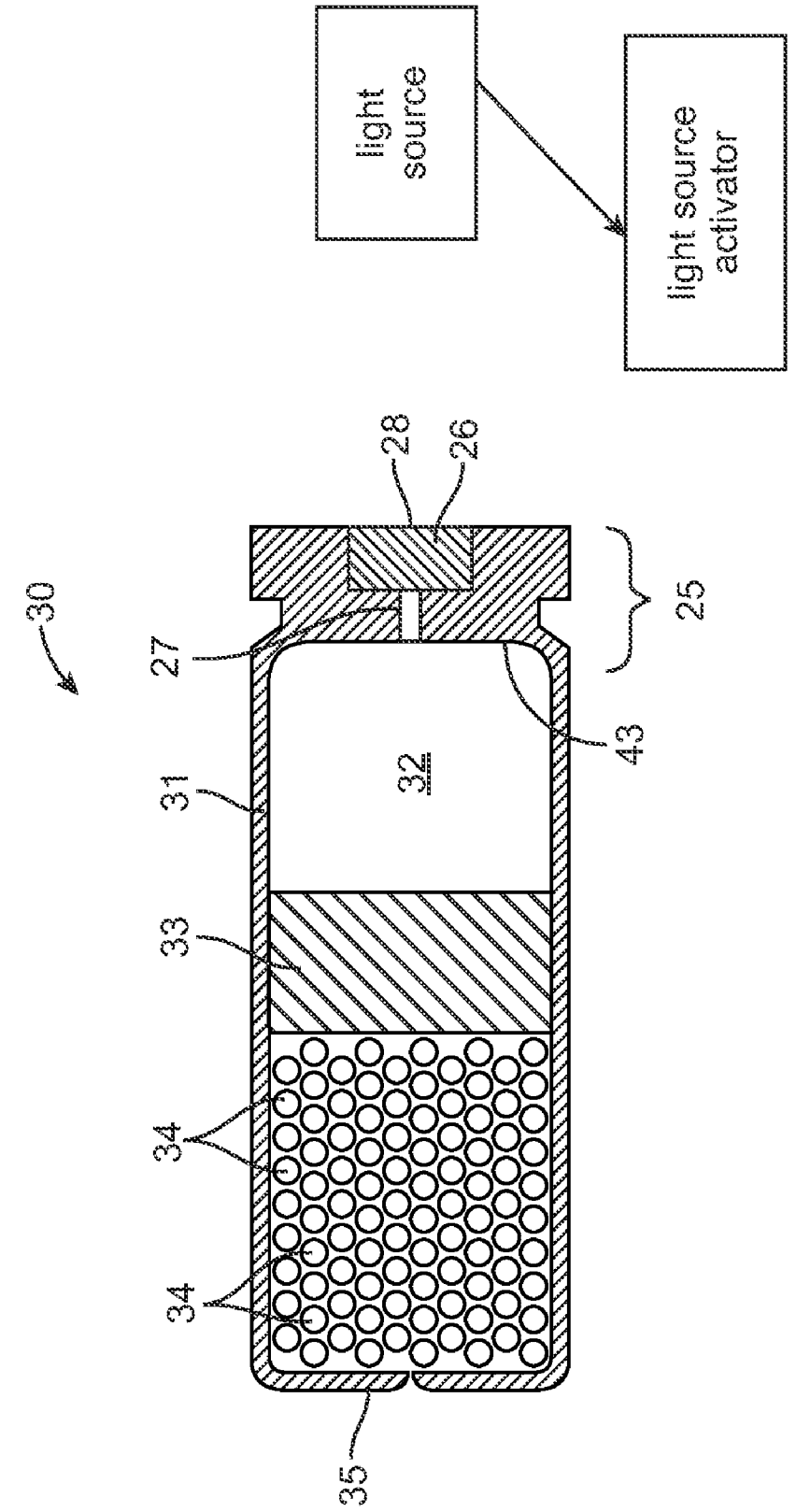
light source
light source activator
28
26
30
27
25
32
43
31
33
34
34
35

FIG. 3

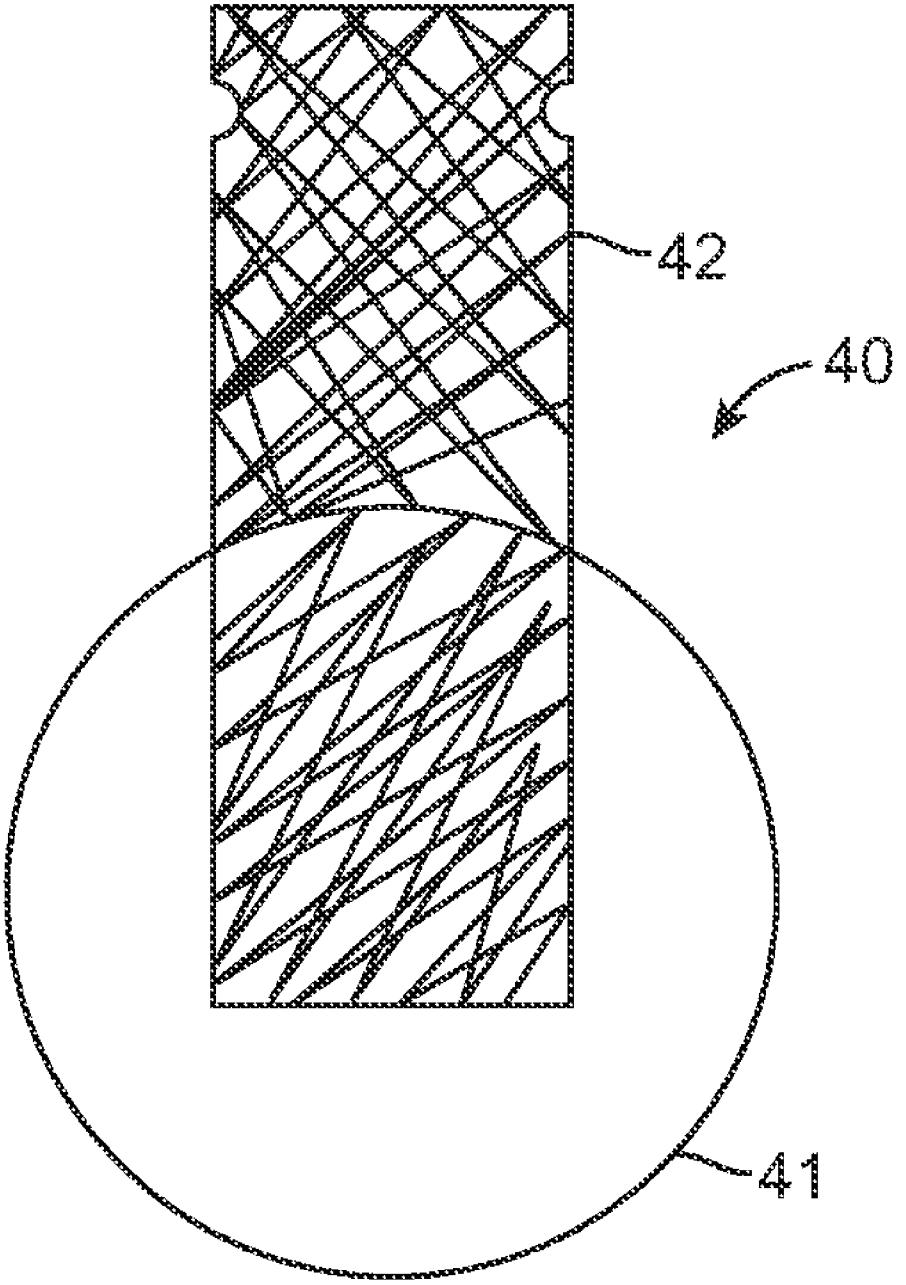

FIG. 4

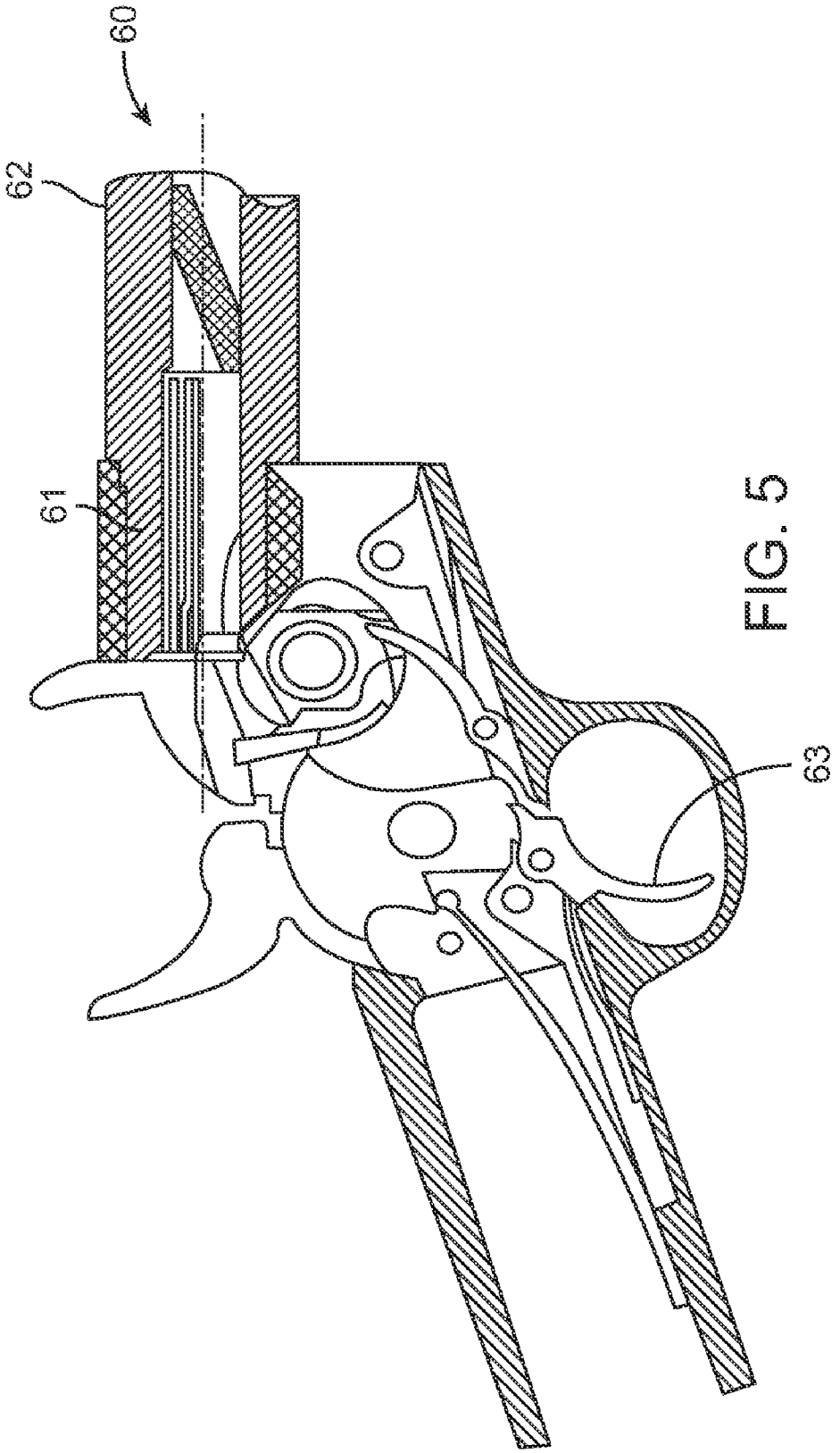

FIG. 5

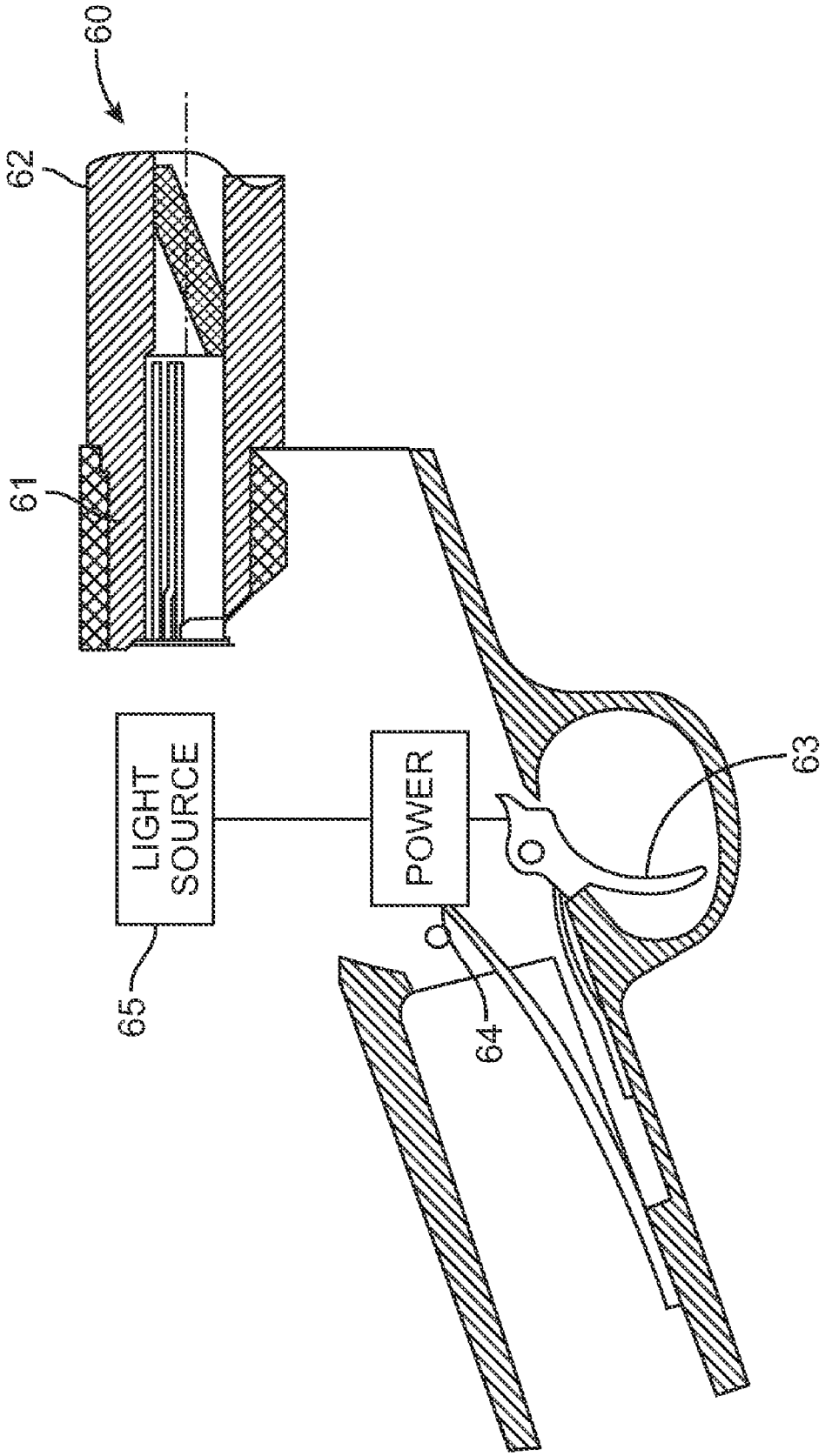

FIG. 6

LIGHT ACTIVATED CARTRIDGE AND GUN FOR FIRING SAME

FIELD OF THE INVENTION

[0001] The invention relates to the field of ammunition and guns.

BACKGROUND OF THE INVENTION

[0002] Ammunition, often referred to as ammo, is a generic term derived from the French language la munition which embraced all material used for war (from the Latin munire, to provide), but which in time came to refer specifically to gunpowder and artillery. The collective term for all types of ammunition is munitions. In the widest sense of the word it covers anything that can be used in combat that includes bombs, missiles, warheads, and mines (landmines, naval mines, and anti-personnel mines)—that munitions factories manufacture. The purpose of ammunition is predominantly to project force against a selected target. However, the nature of ammunition use also includes delivery or combat supporting munitions such as pyrotechnic or incendiary compounds. Since the design of the cartridge, the meaning has been transferred to the assembly of a projectile and its propellant in a single package.

[0003] The subject of ammunition is a complex one which covers application of fire to targets, general use of weapons by personnel, explosives and propellants, cartridge systems, high explosive projectiles (HE), warheads, Shaped charge forms of attack on armour and aircraft, carrier projectiles, fuzes, mortar ammunition, small arms ammunition, grenades, mines, pyrotechnics, improved conventional munitions, and terminally guided munition.

[0004] The design of the ammunition is determined by its purpose; anti-personnel ammunition is often designed to break up or tumble inside the target, in order to maximize the damage done. Anti-personnel shells contain shrapnel and are designed to explode in mid-air, so its fragments will spread over a large area. Armor-piercing ammunition tends to be hard, sharp, and narrow, often with lubrication. Incendiary projectiles include a material such as white phosphorus which burns fiercely. Tracer ammunition emits light as it travels, allowing the gunner to see the path of bullets in flight while using a machine gun.

[0005] Popular types of military rifle and machine-gun ammunition include the 5.45 mm, 5.56 mm, and 7.62 mm Main battle tanks use KE-penetrators to combat other MBTs and armoured fighting vehicles, and HE-Frag (High Explosive-Fragmentation) for soft targets such as infantry.

[0006] Ammunition for infantry refers to the ammunition carried by a typical foot (infantry) soldier. Someone serving in the infantry generally carries, in pouches, bandoliers, etc., one hundred rounds of small-arms ammunition (S.A.A.), and it is usual to supplement this, when an action is imminent, from the regimental reserve. Like any trade, the proper tools are necessary for the task at hand. Infantry need to be provided with the weapons and ammunition to deal with the expected threat, be it another foot soldier, a mounted combatant, armoured vehicle or aircraft.

[0007] Every reduction in the caliber (size) of the rifle's ammunition means an increase in the number of rounds carried. One hundred rounds of the Martini-Henry ammunition weighed 10 pounds 10 ounces (4.8 kg); the same weight gives 155 rounds of 0.303 in (7.7 mm) ammunition and at 0.256 in (6.5 mm) the number of rounds is still greater.

[0008] In western (NATO) forces, the 7.62 mm NATO round has been mostly replaced by the lighter 5.56 mm NATO round, which is better suited for automatic fire than the larger round and allows each soldier to carry more ammunition. The larger caliber ammunition is still retained where range and weight of shot is important, e.g. machine guns and sniper rifles.

[0009] Other nations, especially forces with former ties to the Soviet Union tend to use rifles related to or developed from the AK-47 with similar sized rounds to the NATO ones. In 7.62×39 mm and 5.45×39 mm for assault rifles and 7.62×54R for sniper rifles and light machine guns.

[0010] Modern artillery ordnance ammunition is generally of two types: separate loading and semi-fixed. Semi-fixed ammunition (rounds) appear in the form of a projectile mated with a cartridge case which contains the propellant and they resemble small arms rounds.

[0011] The canister is outfitted with a primer on its base which fires upon contact from the firing pin. Gunpowder, precision machined to burn evenly, is contained inside of cloth bags that are numbered. US/NATO 105 mm howitzers use semi-fixed ammunition, containing seven powder bags referred to as increments or charges. Putting the powder in bags allows the howitzer crew to remove the increments when firing at closer targets. The unused increments are disposed of by burning in a powder pit at a safe distance from the guns.

[0012] Above a certain size, semi-fixed rounds are impracticable; the weight of the whole assembly is too much to be carried effectively. In this case separate loading ammunition is used: the projectile and propelling charge are supplied and loaded separately. The projectile is rammed home in the chamber, the powder charge(s) are loaded (usually by hand), then the breech is closed and the primer is inserted into the primer holder on the back the breech. Separate loading ammunition is typically used on 155 mm and larger howitzers. Several propellant types are available for 155 mm howitzer.

[0013] All normal projectiles arrive at the weapon with a plug in the fuze well on the nose of the projectile. Using a special fuze wrench, the plug is unscrewed and a fuze is screwed in. The decision as to which type of fuze to use is made by the fire direction center and carried out by the gun crew.

Pointed Bullets

[0014] Among the first pointed or "conical" bullets were those designed by Captain John Norton of the British Army in 1823. Norton's bullet had a hollow base which expanded under pressure to engage with a barrel's "rifling" (internal grooves) at the moment of being fired; the British Board of Ordnance rejected it because spherical bullets had been in use for the last 300 years.

[0015] Renowned English gunsmith William Greener invented the Greener bullet in 1836. It was very similar to Norton's bullet except that the hollow base of the bullet was fitted with a wooden plug which more reliably forced the base of the bullet to expand and catch the rifling. Tests proved that Greener's bullet was extremely effective but it too was rejected for military use because, being two parts, it was judged as being too complicated to produce.

[0016] The soft lead bullet that came to be known as the Minié ball, (or minnie ball) was first introduced in 1847 by

Claude Étienne Minié, a captain in the French Army. It was nearly identical to the Greener bullet. As designed by Minié, the bullet was conical in shape with a hollow cavity in the rear, which was fitted with a little iron cap instead of a wooden plug. When fired, the iron cap would force itself into the hollow cavity at the rear of the bullet, thereby expanding the sides of the bullet to grip and engage the rifling. In 1855, the British adopted the Minié ball for their Enfield rifles.

[0017] It was in the American Civil War, however, that the Minié ball first saw widespread use. Roughly 90% of the battlefield casualties in this war were caused by Minié balls fired from rifles.

[0018] Between 1854 and 1857, Sir Joseph Whitworth conducted a long series of rifle experiments, and proved, among other points, the advantages of a smaller bore and, in particular, of an elongated bullet. The Whitworth bullet was made to fit the grooves of the rifle mechanically. The Whitworth rifle was never adopted by the government, although it was used extensively for match purposes and target practice between 1857 and 1866, when it was gradually superseded by Metford's.

[0019] About 1862 and later, W. E. Metford had carried out an exhaustive series of experiments on bullets and rifling, and had invented the important system of light rifling with increasing spiral, and a hardened bullet. The combined result of the above inventions was that in December 1888 the Lee-Metford small-bore (0.303", 7.70 mm) rifle, Mark I, (photo of cartridge on right) was finally adopted for the British army. The Lee-Metford was the predecessor of the Lee-Enfield.

[0020] The next important change in the history of the rifle bullet occurred in 1883, when Major Rubin, director of the Swiss Laboratory at Thun, invented the copper jacketed bullet; an elongated bullet with a lead core in a copper envelope or jacket.

[0021] The copper jacketed bullet allows much higher muzzle velocities than lead alone, as copper has a much higher melting point, greater specific heat capacity, and is harder. Lead bullets fired at high velocity may suffer surface melting due to hot gases behind and friction with the bore.

[0022] European advances in aerodynamics led to the pointed spitzer bullet. By the beginning of the twentieth century, most world armies had begun to transition to spitzer bullets. These bullets flew for greater distances more accurately and carried more energy with them. Spitzer bullets combined with machine guns increased the lethality of the battlefield drastically.

[0023] The final advancement in bullet shape occurred with the development of the boat tail which is a streamlined base for spitzer bullets. A vacuum is created when air strata moving at high speed passes over the end of a bullet. The streamlined boat tail design aims to eliminate this drag-inducing vacuum by allowing the air to flow alongside the surface of the tapering end, thus eliminating the need for air to turn around the 90-degree angle normally formed by the end of shaped bullets. The resulting aerodynamic advantage is currently seen as the optimum shape for rifle technology. The spitzer boat-tailed bullet (Balle "D") was first introduced as standard ammunition in a military rifle in 1901, for the French Lebel Mle 1886 service weapon.

SUMMARY OF THE INVENTION

[0024] The cartridge of the invention is light activated. The light can be any type of light provided the light can generate sufficient heat in a short period of time (less than 1 second) to ignite the propellant inside the cartridge. The cartridge is comprised of a casing which is generally cylindrical in shape. The casing contains a propellant or explosive such as gun powder and holds the bullet or projectile at a first end. The second end of the casing includes a light transparent portion. The light transparent portion may be comprised of clear or transparent glass or clear or transparent polymeric material or other transparent or translucent material of any type. The light transparent portion may have any configuration but it is generally circular and positioned in the casing at the second end where the primer is normally positioned in a conventional cartridge. The cartridge is activated or fired by shining light through the light transparent portion and contacting the propellant or explosive in the cartridge with a sufficient amount of light energy to cause the propellant to quickly expand thereby forcing the bullet out of the cartridge.

[0025] An aspect of the invention is that the bullet can be used in a gun which does not include a conventional hammer.

[0026] Another aspect of the invention is that the light used to activate the charge or propellant may be a LASER and the light beam can be positioned to shine out of the barrel in the same direction that the bullet is traveling to aid in targeting the bullet.

[0027] Another aspect of the invention is that the cartridge may be in some cases be reloaded without the need for replacing a primer in that the cartridge need not include any primer and light transparent portion can be reused.

[0028] Another aspect of the invention is that the light source can be a LASER of any type such as a green LASER which provides a focused beam of light along the trajectory of the bullet.

[0029] Another aspect of the invention is a gun loaded with the cartridge of the invention.

[0030] Another aspect of the invention is a gun with a light source positioned such that when activated the light source will provide light energy to a position where the light transparent portion of the cartridge will be in the gun chamber.

[0031] These and other objects, advantages, and features of the invention will become apparent to those persons skilled in the art upon reading the details of the cartridge, gun, and loaded gun as more fully described below.

BRIEF DESCRIPTION OF THE DRAWINGS

[0032] The invention is best understood from the following detailed description when read in conjunction with the accompanying drawings. It is emphasized that, according to common practice, the various features of the drawings are not to-scale. On the contrary, the dimensions of the various features are arbitrarily expanded or reduced for clarity. Included in the drawings are the following figures:

[0033] FIG. **1** shows a perspective view of the cartridge of the invention.

[0034] FIG. **2** is a cross-sectional view of a high powered rifle cartridge of the invention.

[0035] FIG. **3** is a cross-sectional view of a shot gun cartridge of the invention.

[0036] FIG. **4** is perspective view of a light transmitting portion which can fit within a proximal end of a cartridge of an invention.

[0037] FIG. **5** is a cross-sectional view of a conventional gun trigger mechanism.

[0038] FIG. **6** is a cross-sectional view of a gun of the invention.

DETAILED DESCRIPTION OF THE INVENTION

[0039] Before the present cartridge and gun are described, it is to be understood that this invention is not limited to particular cartridge and gun embodiments described, as such may, of course, vary. It is also to be understood that the terminology used herein is for the purpose of describing particular embodiments only, and is not intended to be limiting, since the scope of the present invention will be limited only by the appended claims.

[0040] Where a range of values is provided, it is understood that each intervening value, to the tenth of the unit of the lower limit unless the context clearly dictates otherwise, between the upper and lower limits of that range is also specifically disclosed. Each smaller range between any stated value or intervening value in a stated range and any other stated or intervening value in that stated range is encompassed within the invention. The upper and lower limits of these smaller ranges may independently be included or excluded in the range, and each range where either, neither or both limits are included in the smaller ranges is also encompassed within the invention, subject to any specifically excluded limit in the stated range. Where the stated range includes one or both of the limits, ranges excluding either or both of those included limits are also included in the invention.

[0041] Unless defined otherwise, all technical and scientific terms used herein have the same meaning as commonly understood by one of ordinary skill in the art to which this invention belongs. Although any methods and materials similar or equivalent to those described herein can be used in the practice or testing of the present invention, some potential and preferred methods and materials are now described. All publications mentioned herein are incorporated herein by reference to disclose and describe the methods and/or materials in connection with which the publications are cited. It is understood that the present disclosure supercedes any disclosure of an incorporated publication to the extent there is a contradiction.

[0042] It must be noted that as used herein and in the appended claims, the singular forms "a", "an", and the include plural referents unless the context clearly dictates otherwise. Thus, for example, reference to "a light transparent portion" includes a plurality of such portions and reference to "the light sources" includes reference to one or more light sources and equivalents thereof known to those skilled in the art, and so forth.

[0043] The publications discussed herein are provided solely for their disclosure prior to the filing date of the present application. Nothing herein is to be construed as an admission that the present invention is not entitled to antedate such publication by virtue of prior invention. Further, the dates of publication provided may be different from the actual publication dates which may need to be independently confirmed.

DEFINITIONS

[0044] A Cartridge, is a single unit of ammunition. In conventional small arms a cartridge is the combination of a bullet, propellant, primer and case in a single unit. In connection with the present invention the cartridge does not include a conventional primer and includes a light permeable area.

[0045] A "round" is term synonymous with a fully loaded cartridge. A conventional round is comprised of a projectile, propellent, primer and casing. In connection with the present invention a round does not comprise a conventional primer and does comprise a light transparent area.

[0046] Large numbers of small projectiles intended to be fired all at once in a single discharge are also called shot; hand-held guns designed for this type of ammunition are generally known as shotguns.

[0047] Duds are fully loaded ordnance that fail to function as intended. A cartridge that fails to fire in the weapon is known as a misfire. A partially functioning round is named a Hangfire (firearms). Dud ammunition is regarded as highly dangerous and also known as UXO, and most safety officials inform civilians to report finding of any large-bore duds to the local police or military.

[0048] Dum-dum rounds are early attempts to cause contact-initiated expansion. Many were exposed Leadnose bullets with hashmarks cut across the nose in an "X" configuration.

[0049] A bullet is a hard projectile propelled by a firearm, sling, or air gun and is normally made from metal. A bullet does not contain explosives, but damages the intended target by tissue or mechanical disruption through impact or penetration. The word "bullet" is sometimes erroneously used to refer to a cartridge, which is the combination of bullet, casing (case or shell), gunpowder and primer. The Oxford English Dictionary definition of a bullet is "a projectile of lead . . . for firing from a rifle, revolver etc." However, bullets for air guns are not part of a cartridge.

[0050] Lead: Simple cast, extruded, swaged, or otherwise fabricated lead slugs are the simplest form of bullets. At speeds of greater than 300 m/s (1000 ft/s) (common in most handguns), lead is deposited in rifled bores at an ever-increasing rate. Alloying the lead with a small percentage of tin and/or antimony serves to reduce this effect, but grows less effective as velocities are increased. A cup made of harder metal, such as copper, placed at the base of the bullet and called a gas check, is often used to decrease lead deposits by protecting the rear of the bullet against melting when fired at higher pressures, but this too does not solve the problem at higher velocities.

[0051] Jacketed Lead: Bullets intended for even higher-velocity applications generally have a lead core that is jacketed or plated with cupronickel, copper alloys, or steel; a thin layer of harder metal protects the softer lead core when the bullet is passing through the barrel and during flight, which allows delivering the bullet intact to the target. There, the heavy lead core delivers its kinetic energy to the target. Full metal jacket bullets or Ball bullet have the front and sides of the bullet completely encased in the harder metal jacket. Some bullet jackets do not extend to the front of the bullet to aid in expansion and increase lethality. These are called soft points or hollow point bullets. Steel bullets are often plated with copper or other metals for additional corrosion resistance during long periods of storage. Synthetic jacket materials such as nylon and Teflon have been used with limited success.

[0052] Armor Piercing: Jacketed designs where the core material is a very hard, high-density metal such as tungsten, tungsten carbide, depleted uranium, or steel. A pointed tip is often used, but a flat tip on the penetrator portion is generally more effective.

[0053] Tracer: These have a hollow back, filled with a flare material. Usually this is a mixture of magnesium perchlorate, and strontium salts to yield a bright red color, although other materials providing other colors have also sometimes been used. Tracer material burns out after a certain amount of time. Such ammunition is useful to the shooter as a means of verifying how close the point of aim is to the actual point of impact, and for learning how to point shoot moving targets with rifles. This type of round is also used by all branches of the United States military in combat environments as a signaling device to friendly forces. Normally it is loaded at a four to one ratio with ball ammunition and is intended to show where you are firing so friendly forces can engage the target as well. The flight characteristics of tracer rounds differ from normal bullets, decreasing in altitude sooner than other bullets, because of increased aerodynamic drag.

[0054] Incendiary: These bullets are made with an explosive or flammable mixture in the tip that is designed to ignite on contact with a target. The intent is to ignite fuel or munitions in the target area, thereby adding to the destructive power of the bullet itself.

[0055] Frangible: Designed to disintegrate into tiny particles upon impact to minimize their penetration for reasons of range safety, to limit environmental impact, or to limit the shoot-through danger behind the intended target. An example is the Glaser Safety Slug.

[0056] Non Toxic: Bismuth, tungsten, steel, and other exotic bullet alloys prevent release of toxic lead into the environment. Regulations in several countries mandate the use of non-toxic projectiles especially when hunting waterfowl. It has been found that birds swallow small lead shot for their gizzards to grind food (as they would swallow pebbles of similar size), and the effects of lead poisoning by constant grinding of lead pellets against food means lead poisoning effects are magnified. Such concerns apply primarily to shotguns, firing pellets (shot) and not bullets, but reduction of hazardous substances (RoHS) legislation has also been applied to bullets on occasion to reduce the impact of lead on the environment at shooting ranges.

[0057] Practice: Made from lightweight materials like rubber, Wax, wood, plastic, or lightweight metal, practice bullets are intended for short-range target work, only. Because of their weight and low velocity, they have limited range.

[0058] Less Lethal, or Less than Lethal: Rubber bullets, plastic bullets, and beanbags are designed to be non-lethal, for example for use in riot control. They are generally low velocity and are fired from shotguns, grenade launchers, paint ball guns, or specially-designed firearms and air gun devices.

[0059] Blanks: Wax, paper, plastic, and other materials are used to simulate live gunfire and are intended only to hold the powder in a blank cartridge and to produce noise. The 'bullet' may be captured in a purpose-designed device or it may be allowed to expend what little energy it has in the air. Some blank cartridges are crimped or closed at the end and do not contain any bullet.

[0060] Blended-Metal: Bullets made using cores made powdered metals other than lead with binder. Sometimes sintered.

[0061] Exploding: Similar to the incendiary bullet, this type of projectile is designed to explode upon hitting a hard surface, preferably the bone of the intended target. Not to be mistaken for cannon rounds or grenade with fuze devices, these bullets have only a cavity filled with a small amount of low explosive depending on the velocity and deformation upon impact to detonate. Usually produced for hunting airguns with the intent of increasing the bullets effectiveness.

Preferred Embodiments

[0062] Referring now to FIG. **1** which shows a perspective view of the cartridge **1** of the invention. The cartridge **1** is comprised of a projectile **2** and a shell **3**. The shell has a first end **4** which holds the bullet **2** in place and a second end **5** which may be expanded as shown in order to prevent the bullet from slipping forward in the chamber. The shell **3** includes a light transparent portion **6**.

[0063] The light transparent portion **6** may be comprised of glass or may be comprised of a polymeric material which is transparent to the wavelength or wavelengths of light being used to activate the propellant **7** held within the shell **3**.

[0064] The invention can further include a gun which the cartridge of FIG. **1** is loaded into. The gun may be comprised of an elongated cylindrical barrel and a chamber which is used for holding the cartridge. The gun further includes a light source which is positioned such that on activation light from the light source shines into any set position of the chamber and in particular shines into a position in the chamber where the solid light transparent portion of the cartridge is positioned. Thus, the light will shine into the cartridge and activate the explosives such as gunpowder present within the cartridge.

[0065] The gun may have positioned in the chamber a light focusing component such as a lens or mirror component. The lens or mirror component is positioned such that when the light is shined onto the mirror or through the lens the light is focused onto the light transparent portion of the cartridge. The focused light can focus the energy and intensity of the light thereby providing a greater amount of heat to the gun powder in a shorter period of time.

[0066] The light transparent portion is preferably quite small relative to the size of the cartridge e.g. less than ½ the cartridge diameter, or less than ¼ or less than ⅕ or less than 1/10 the cartridge diameter. For example, the light transparent portion can be 2 mm or less in diameter, 1 mm or less in diameter, 0.5 mm or less in diameter. 0.2 mm or less in diameter. Making the light transparent portion very small makes it possible to reduce the size of this component which could reduce costs particularly if this component needs to be replaced after firing. The light transparent portion should be comprised of glass or polymeric material of sufficient strength and thickness such that when the gun powder in the casing is exploded the point of greatest weakness is the bullet held within the other end of the chamber so that the bullet will be expelled and the transparent portion will not be broken or forced out of the casing. This is insured by keeping the ratio of the diameter of the component small relative to the diameter of the casing end holding the bullet.

[0067] Bullet designs have to solve two primary problems. They must first form a seal with the gun's bore. The worse the seal, the more gas, generated by the rapid combustion of the propellant charge, leaks past the bullet, reducing the efficiency. The bullet must also engage the rifling without damaging the gun's bore. Bullets must have a surface which will form this seal without causing excessive friction. What happens to a bullet inside the bore is termed internal ballistics. A bullet must also be consistent with the next bullet so that shots may be fired precisely.

[0068] Once it leaves the barrel, it is governed by external ballistics. Here, the bullet's shape is important for aerody-

namics, as is the rotation imparted by the rifling. Rotational forces stabilize the bullet gyroscopically as well as aerodynamically. Any asymmetry in the bullet is largely cancelled as it spins. With smooth-bore firearms, a spherical shape was optimum because no matter how it was oriented, it presented a uniform front. These unstable bullets tumbled erratically, but the aerodynamic shape changed little giving moderate accuracy. Generally, bullet shapes are a compromise between aerodynamics, interior ballistics necessities, and terminal ballistics requirements. Another method of stabilization is for the center of mass of the bullet to be as far forward as practical as in the minnie ball or the shuttlecock. This allows the bullet to fly front-forward by means of aerodynamics.

[0069] The terminal ballistics and/or Stopping power relates to how bullet design affects what happens when a bullet hits something. What happens to the bullet is dictated as much by what it hits and how it hits, as by the bullet itself (just like how its interaction with air was critical in external ballistics). Bullets are generally designed to penetrate, deform, and/or break apart. For a given material and bullet, which of these happens is determined especially by the strike velocity.

[0070] Bullets for black powder, or muzzle loading firearms, were classically molded from pure lead. This worked well for low speed bullets, fired at velocities of less than 300 m/s (1000 ft/s). For slightly higher speed bullets fired in modern firearms, a harder alloy of lead and tin or typesetter's lead (used to mold Linotype) works very well. For even higher speed bullet use, jacketed coated lead bullets are used. The common element in all of these, lead, is widely used because it is very dense, thereby providing a high amount of mass—and thus, kinetic energy—for a given volume). Lead is also cheap, easy to obtain, easy to work, and melts at a low temperature, making it easy to use in fabricating bullets.

[0071] FIG. **2** shows another embodiment of a cartridge **20** comprised of a shell **21** which holds a bullet **22** at its first end **23** and inside holds a charge **24** of any type such as gun powder. The cartridge **20** of FIG. **2** is a cartridge of a type generally used in a high powered rifle and the cartridge **1** of FIG. **1** is a cartridge of a type generally used in a pistol. The shell **21** could be configured to hold a transparent component in the same manner as the shell **3** in FIG. **1**. However, the shell **21** has a second end **25** which also comprises a light focusing component **26** and a light transmitting component **27**. The light **28** strikes the component **26** which may be a lens or a mirror and travels through the component **27** which is optimally present or may be an efficient light transmitting component. The light contacts the charge **24** which may be gunpowder and ignites the charge. This generates enormous pressure which forces the bullet **22** forward out of the shell. Once the charge **24** and bullet **22** have been forced out of the shell the light **28** will travel out of the gun along the trajectory of the bullet. The focusing component may focus light directly on the charge **24** without the need for and light transmitting component **27**.

[0072] FIG. **3** shows another embodiment of a cartridge **30**. The cartridge **30** is typically referred to as a shot gun shell. The cartridge **30** comprises a shell **31** which holds a charge **32** a wad **33** and a plurality of shot **34**. The shell **31** includes a first end portion **35** which is bent inward and sealed to completely enclose the contents of the shell. The components **25**, **26**, **27** and **28** are as described above in reference to FIG. **2**. In both FIGS. **2** and **3** the light transmitting component **27** may be absent and the light focusing component **26** may function only to transmit light **28** to the charge **24**.

[0073] One aspect of the invention is that conventional cartridge configurations can be easily adapted to use the basic concepts of the invention and convention gun configurations can be adapted and/or reconfigured to shoot the light activated cartridges of the invention. For example, the cartridges of FIGS. **1**, **2** and **3** could represent conventional cartridges where a primer is present in place of the light transmitting and/or light focusing components. A light transmitting and/or light focusing component could be manufactured to have the same size and shape as a conventional primer of any center fire cartridge e.g. 0.38, 9 mm, 0.45, 0.357, 0.223. Such a light transmitting and/or focusing component may be snapped into the same position at the end of the cartridge as the primer occupied. Such a configuration makes it possible to use spent or fired conventional shells in order to make a re-loaded light activated cartridge of the invention.

[0074] FIG. **4** shows an embodiment of a light transmitting component **40**. The component **40** is comprised of a solid transparent disc **41** and a transparent, cylindrical rod **42** which extends upward in a perpendicular manner from the center of the disc **41**. Referring to FIGS. **2** and **3** the rod may fit through the opening left when the components **26** and **27** are removed. The disc **42** is configured to fit tightly against the inside surface **43** of the cartridge **20** or **30** shown respectively in FIGS. **2** and **3**.

[0075] The light transmitting component may be comprised of glass and "glass" as used here refers to any hard, transparent or translucent material. The term includes types of soda-lime glass, borosilicate glass, acrylic glass, sugar glass, aluminum oxynitride and extends to all amorphous solids, polymer and resins as well as glass ceramic, see U.S. Pat. No. 7,501,365. The use of impact resistant glass or "bullet proof" glass provides some advantages.

[0076] Referring to FIG. **2** the shell **21** is comprised of conventional materials such as metal, e.g. brass, aluminum, and various metal alloys. The bullet is also comprised of conventional materials and in general a metal such as lead, copper or a mixture thereof but may be a semi-rigid polymer to create a "rubber" bullet.

[0077] The charge **24** may be any conventional material such as conventional gunpowder, which may be 75% saltpeter (KNO_3), 15% charcoal and 10% sulfur. When ignited gun powder quickly oxides via:

$$2KNO_2+S+3C \rightarrow K_2S+3CO_2+N_2$$

[0078] This reaction causes the gun powder to expand its space by about 3,600 times its original volume which when confined creates a force of about 20 tons/sq. inch.

[0079] Although gun powder burns at a high temperature 2,138° C. it is ignited at a much lower temperature e.g. 250° C. to 304° C. Lower ignition temperatures can be obtained by changing the chemical and physical characteristics of the charge **24**. It is desirable in some embodiment to reduce the ignition temperature of the charge **24** in order to reduce the amount of light energy needed to ignite the charge **24**.

[0080] Compositions which do not ignite at lower temperatures (e.g. 100° C. or less) but ignite at 120° C. or more, 150° C. or more may be used, see U.S. Pat. Nos. 6,645,326; 5,959,242; 6,101,947; and 5,866,842, as well as patents and documents cited in these patents.

[0081] A large number of different trigger mechanisms are known and have been used for hundreds of years. An example of one is shown in FIG. **5**.

[0082] FIG. **6** shows a cross sectional perspective view of a gun **60** of the invention. The cartridge **30** of FIG. **3** is in a chamber **61** at the proximal end of the barrel **62**. The trigger **63** may be left in place to provide a familiar way to switch on the power **64** of the light activation component which activates the light source **65**. However, a conventional button switch used on a flashlight could be used to activate the light source.

[0083] The preceding merely illustrates the principles of the invention. It will be appreciated that those skilled in the art will be able to devise various arrangements which, although not explicitly described or shown herein, embody the principles of the invention and are included within its spirit and scope. Furthermore, all examples and conditional language recited herein are principally intended to aid the reader in understanding the principles of the invention and the concepts contributed by the inventors to furthering the art, and are to be construed as being without limitation to such specifically recited examples and conditions. Moreover, all statements herein reciting principles, aspects, and embodiments of the invention as well as specific examples thereof, are intended to encompass both structural and functional equivalents thereof. Additionally, it is intended that such equivalents include both currently known equivalents and equivalents developed in the future, i.e., any elements developed that perform the same function, regardless of structure. The scope of the present invention, therefore, is not intended to be limited to the exemplary embodiments shown and described herein. Rather, the scope and spirit of present invention is embodied by the appended claims.

That which is claimed is:

1. A light activated cartridge, comprising:

a metal casing comprised of a substantially cylindrical configuration, a first end of the casing configured for holding a projectile and a second end of the casing having positioned therein a solid light transparent portion extending through the second end.

2. The cartridge as claimed in claim **1**, further comprising a bullet positioned in the first end of the casing.

3. The cartridge as claimed in claim **2**, further comprising:

a propellant positioned inside the cylindrical casing wherein the propellant has an ignition temperature of 350° C. or less.

4. The cartridge as claimed in claim **3**, wherein the solid light transparent portion is comprised of a material selected from the group consisting of transparent glass and a transparent polymeric compound.

5. The cartridge as claimed in claim **4**, wherein the solid light transparent portion is shaped as a lens configured to focus light on the propellant.

6. The cartridge as claimed in claim **5**, wherein the propellant is gunpowder having an ignition temperature in a range of from 250° C. to 320° C.

7. The cartridge as claimed in claim **6**, wherein the solid light transparent portion is comprised of borosilicate glass hardened via ion exchange.

8. A gun, comprising:

an elongated cylindrical barrel;

a chamber positioned at a first end of the barrel;

a light source which on activation shines light at a set position of the chamber; and

a light activation component which turns on the light source.

9. The gun of claim **8**, further comprising:

a cartridge in the chamber, the cartridge comprising a shell, a bullet held in the shell, an explosive in the shell, and a light transparent portion extending through a wall of the shell, the light transparent portion positioned in line with light shining from the light source.

10. The gun of claim **8**, wherein the light source is positioned such that on activation, light shines out of the barrel in a direction of expected bullet trajectory.

* * * * *